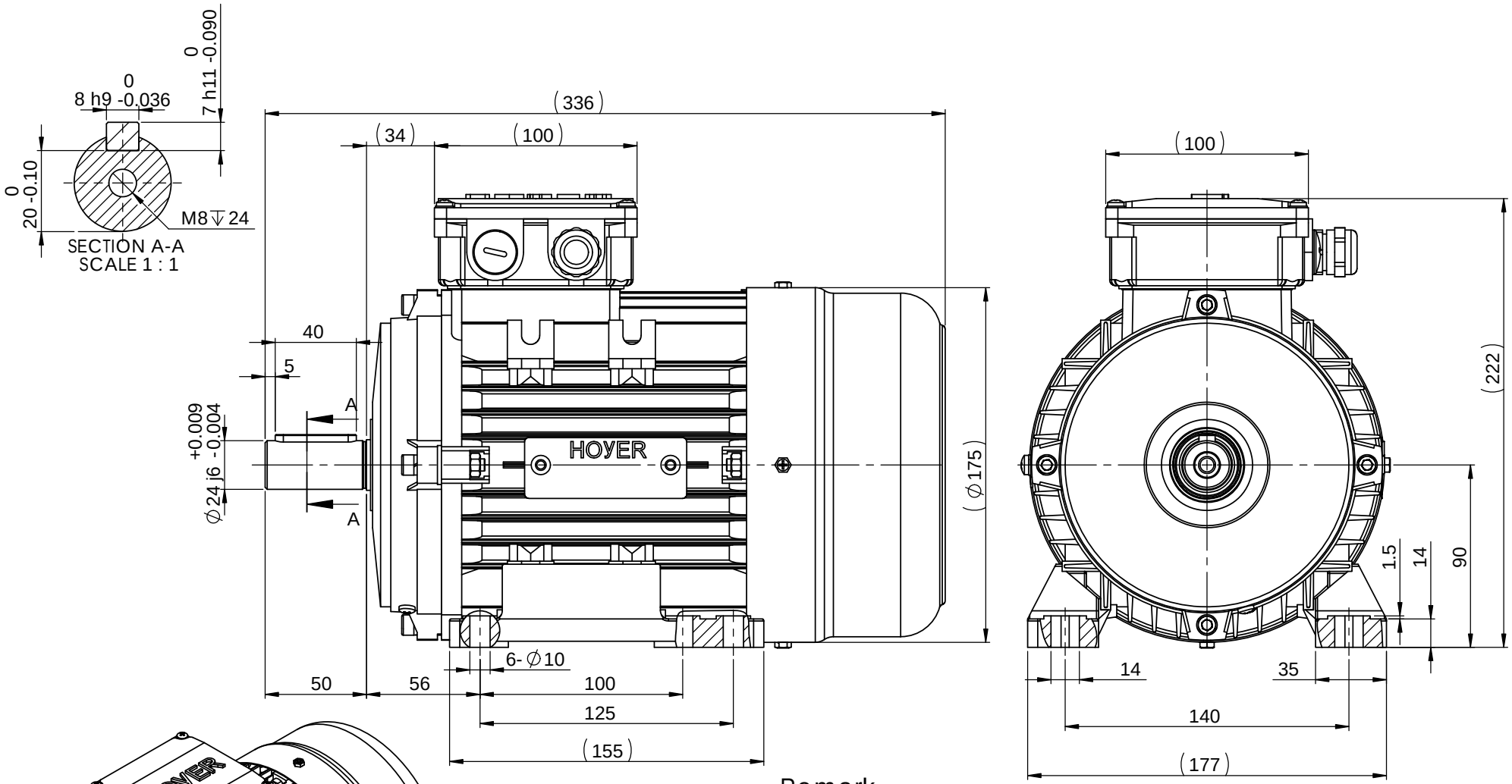

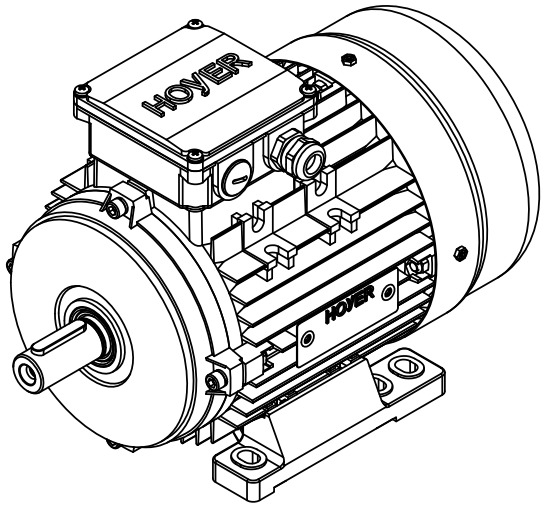

Remark:

1.Cable gland M20X1.5， Blind cap M20X1.5

2.Earth screw mounted on housing only for marine motors

HOYER EXCEEDING EXPECTATIONS	Hoyer Motors Over Hadstenvej 42, DK-8370 Hadsten Tel : +45 86982111 Fax: +45 86981779 www.hoyermotors.com		DEBUR AND BREAK SHARP EDGES	DO NOT SCALE DRAWING	REVISION 05	
	NAME	SIGNATURE	DATE	TITLE: HMA2-90S-B3		
DRAWN	TIH		20150925			
CHK'D						
APPV'D						
MFG						
Q.A				MATERIAL: Al	DWG NO. 70808	A3
				WEIGHT: Kg	SCALE:1:5	SHEET 1 OF 1

© 2010 Hoyer Motors All intellectual property rights and all rights in know-how in relation to this drawing may not be reproduced, stored, or transmitted in any form by any means (electronic, mechanical,photocopying, recording or otherwise) without the prior written consent of Hoyer Motors. It is to be used only for the purposes specified by Hoyer Motors and for no other purpose.