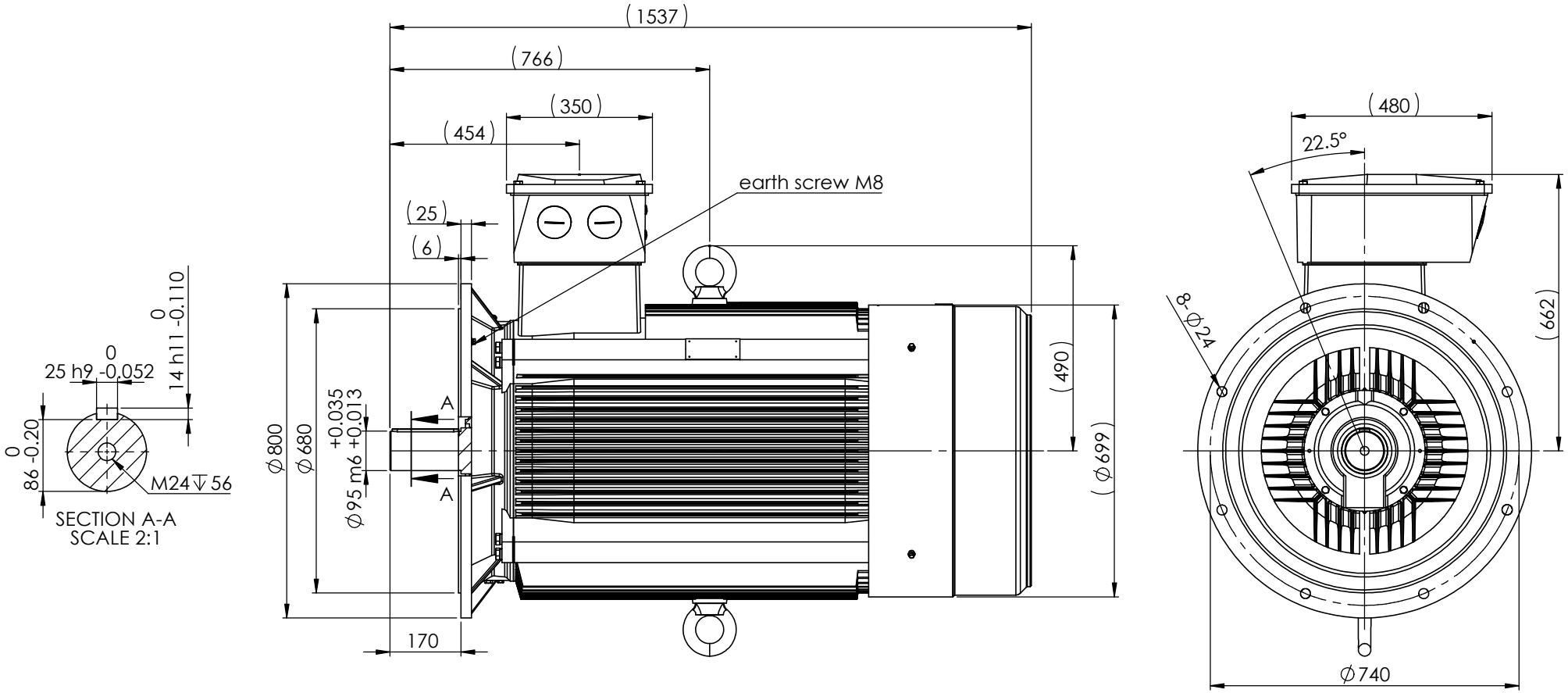

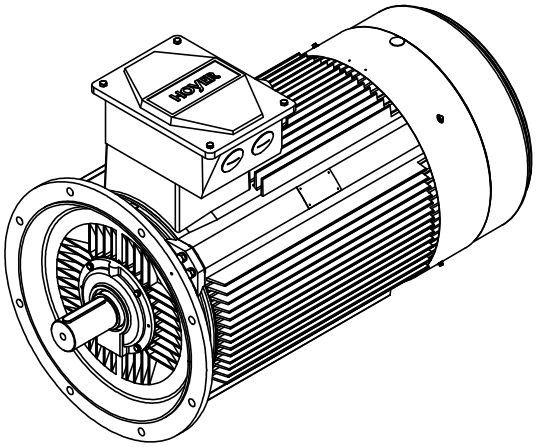

Remark:

1. Eye bolt 2XM36
2. Blind caps are 2xM72x2 and 2xM20x1.5

HOYER EXCEEDING EXPECTATIONS	Hoyer Motors Over Hadstenvej 42, DK-8370 Hadsten Tel : +45 86982111 Fax: +45 86981779 www.hoyermotors.com				DEBUR AND BREAK SHARP EDGES	DO NOT SCALE DRAWING	REVISION 02
	NAME	SIGNATURE	DATE			TITLE: HMC3-355M,L-4,6p-B5	
DRAWN	TIH		20181019				
CHK'D							
APPV'D							
MFG							
Q.A				MATERIAL: cast iron		DWG NO. 90154	A3
				WEIGHT: kg		SCALE:1:20	SHEET 1 OF 1

© 2010 Hoyer Motors All intellectual property rights and all rights in know-how in relation to this drawing may not be reproduced, stored, or transmitted in any form by any means (electronic, mechanical,photocopying, recording or otherwise) without the prior written consent of Hoyer Motors. It is to be used only for the purposes specified by Hoyer Motors and for no other purpose.